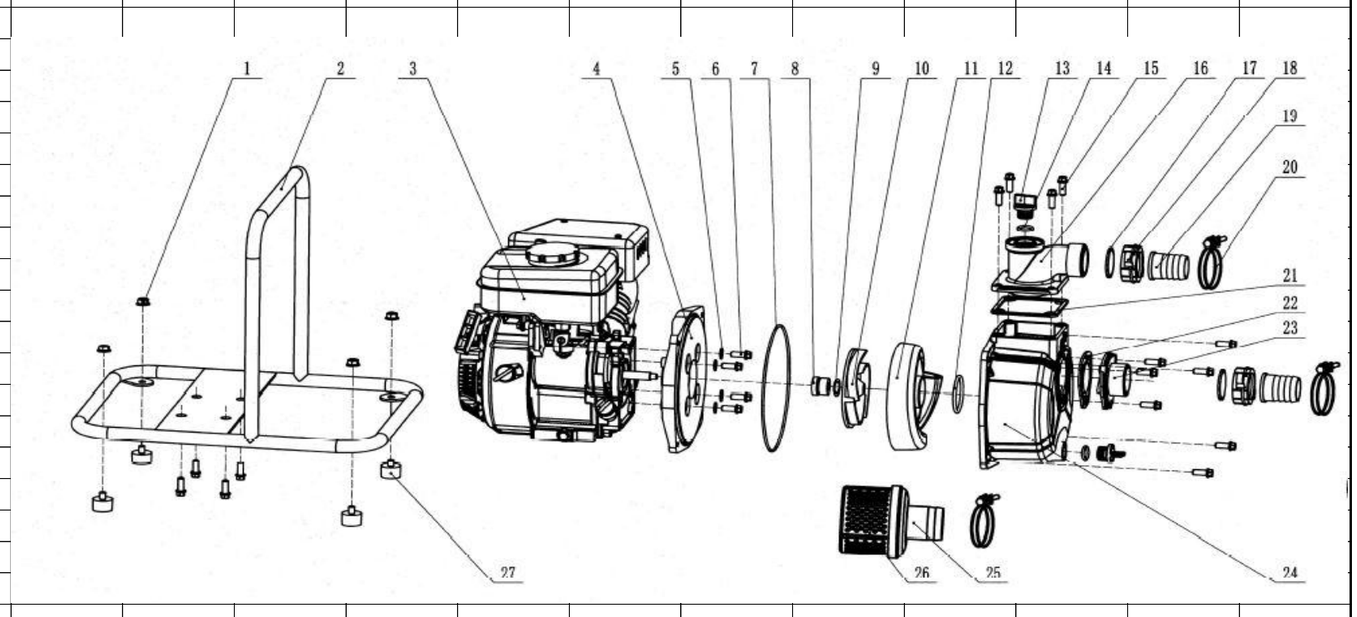PRONTO	PART NUMBER	USE	DESCRIPTION	804449
804601	BIA-WP15A-1		HEX NUT M8	
804609	BIA-WP15A-2		FRAME	
804616	BIA-WP15A-3		ENIGINE	
804617	BIA-WP15A-4		PUMP COVER	
804618	BIA-WP15A-5		O RING 8X3	
804619	BIA-WP15A-6		HEX SCREW M8X35	
804620	BIA-WP15A-7		O RING 194X3.55	
804621	BIA-WP15A-8		MECHANICAL SEAL	
804622	BIA-WP15A-9		WASHER	
804602	BIA-WP15A-10		IMPELLER	
804603	BIA-WP15A-11		DIFFUSER	
804604	BIA-WP15A-12		O RING 42X4.15	
804578	BIA-WP15A-13	USE BIA-WP10-21	PLUG	
804579	BIA-WP15A-14	USE BIA-WP10-22	O RING 15.8X3.1	
804588	BIA-WP15A-15	USE BIA-WP10-30	HEX BOLT M8X20	
804605	BIA-WP15A-16		OUTLET	
804606	BIA-WP15A-17		GASKET	
804607	BIA-WP15A-18		SPANNER	
804608	BIA-WP15A-19		PIPE	
804610	BIA-WP15A-20		CLAMP	
804611	BIA-WP15A-21		SEAL RING	
804612	BIA-WP15A-22		NON RETURN VALVE	
804613	BIA-WP15A-23		INLET	
804614	BIA-WP15A-24		PUMP BODY	
804615	BIA-WP15A-25		STRAINER FITTING	
804593	BIA-WP15A-26	USE BIA-WP10-35	STRAINER	
804594	BIA-WP15A-27	USE BIA-WP10-36	RUBBER FEET